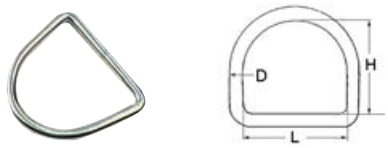

D-Ring

Code	D mm	L mm	H mm	ORDER BY BOX
39.599.20	5	25	22	10
39.599.30	6	30	27	10
39.599.40	6	40	37	10
39.599.50	6	50	47	10
39.599.80	8	50	47	10

Triangle for sail ties

Code	D mm	L mm	ORDER BY BOX
39.599.99	4	20	10
39.600.00	5	30	10
39.600.01	5	45	10
39.600.02	6	50	-
39.600.03	8	50	-

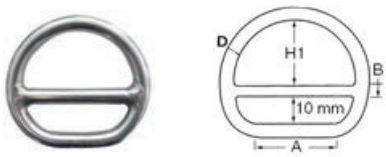

Semi-circle with bar for sail ties

Code	D mm	A mm	B mm	H1 mm
39.602.01	5	45	10	25
39.602.02	6	50	10	28
39.602.03	8	50	10	28
39.602.04	10	60	12	32

ROPEYE textile loops

Ropeye

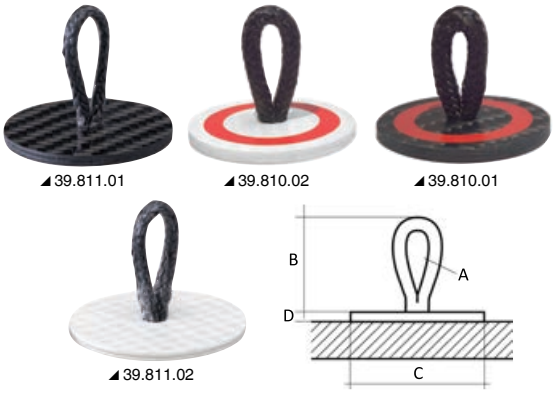

ROPEYE XXS/XS stick-on textile loop

Ropeye has two different types of XXS loops: carbon & glass fibre. The loops are used as stick-on's on a sanded surface to glue the loops to. For elastic gluing: SIKAFLEX 291i 65.289.XX.
Ideal as inside fitting to organize equipment without the need to drill holes for installation.

Code	Ropeye Code	Material	Rope (A) mm	Ring (B) mm	Base-Ø (C) mm	Width (D) mm	Weigh t g	Breaking loag kg
39.810.01	ROXXS-C	Carbon fibre	3	20	30	3	3.0	75
39.810.02	ROXXS-GF	Glass fibre	3	20	30	3	3.0	75
39.811.01	ROXS-C	Carbon fibre	3	30	40	3	5.9	150
39.811.02	ROXS-GF	Glass fibre	3	30	40	3	5.9	150

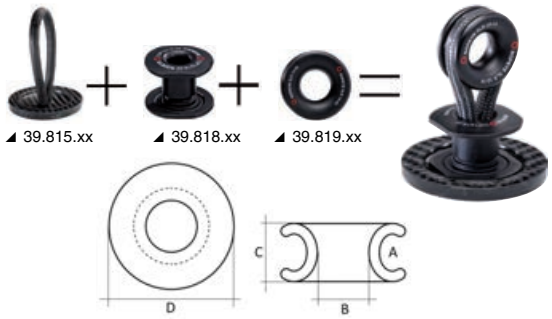

Complete ROPEYE - schematic for the use of a ROPEYE product

Pro Loop (39.815.xx) + Double TDP (39.818.xx) + SLR ring (39.819.XX).

Pro Loop	Double TDP	⟷ mm SLR (A-B)	
39.815.01	39.818.02; 39.818.03; 39.818.04	39.819.01	Ring 7 - 10
39.815.02	39.818.02; 39.818.03; 39.818.04	39.819.01	Ring 7 - 10
39.815.03	39.818.07; 39.818.08; 39.818.09	39.819.03	Ring 14 - 20
39.815.04	39.818.12; 39.818.13; 39.818.14	39.819.04	Ring 20 - 28

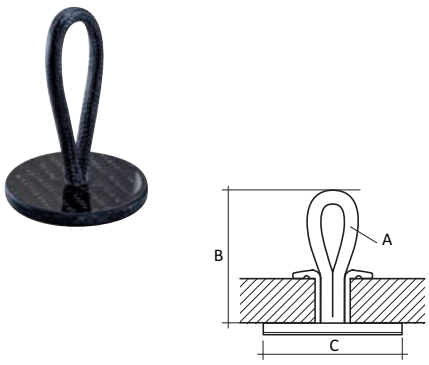

ROPEYE Loop pad eye for deck attachment

Carbon and textile deck attachments for indoor and outdoor applications. Loops must always be used with Ropeye TDP. Loops are used as stick-on's on a sanded surface to glue the loops to. For elastic gluing: SIKAFLEX 291i 65.289.XX. Ropeye SLR complements the Ropeye Loop range. (TDP and SLR not included).

Code	Ropeye Code	Material	Rope (A) mm	Ring (B) mm	Base Ø (C) mm	Weight g	Breaking load kg
39.813.01	ROL40-4	Carbon	4	40	50	15	800
39.813.02	ROL60-4	Carbon	4	60	50	16.5	800
39.813.03	ROL80-4	Carbon	4	80	50	17	800
39.813.04	ROL40-5	Carbon	5	40	50	15.5	1450
39.813.05	ROL60-5	Carbon	5	60	50	16.5	1450
39.813.06	ROL80-5	Carbon	5	80	50	17.5	1450
39.813.07	ROL40-6	Carbon	6	40	60	27.5	1950
39.813.08	ROL60-6	Carbon	6	60	60	28	1950
39.813.09	ROL80-6	Carbon	6	80	60	30.5	1950